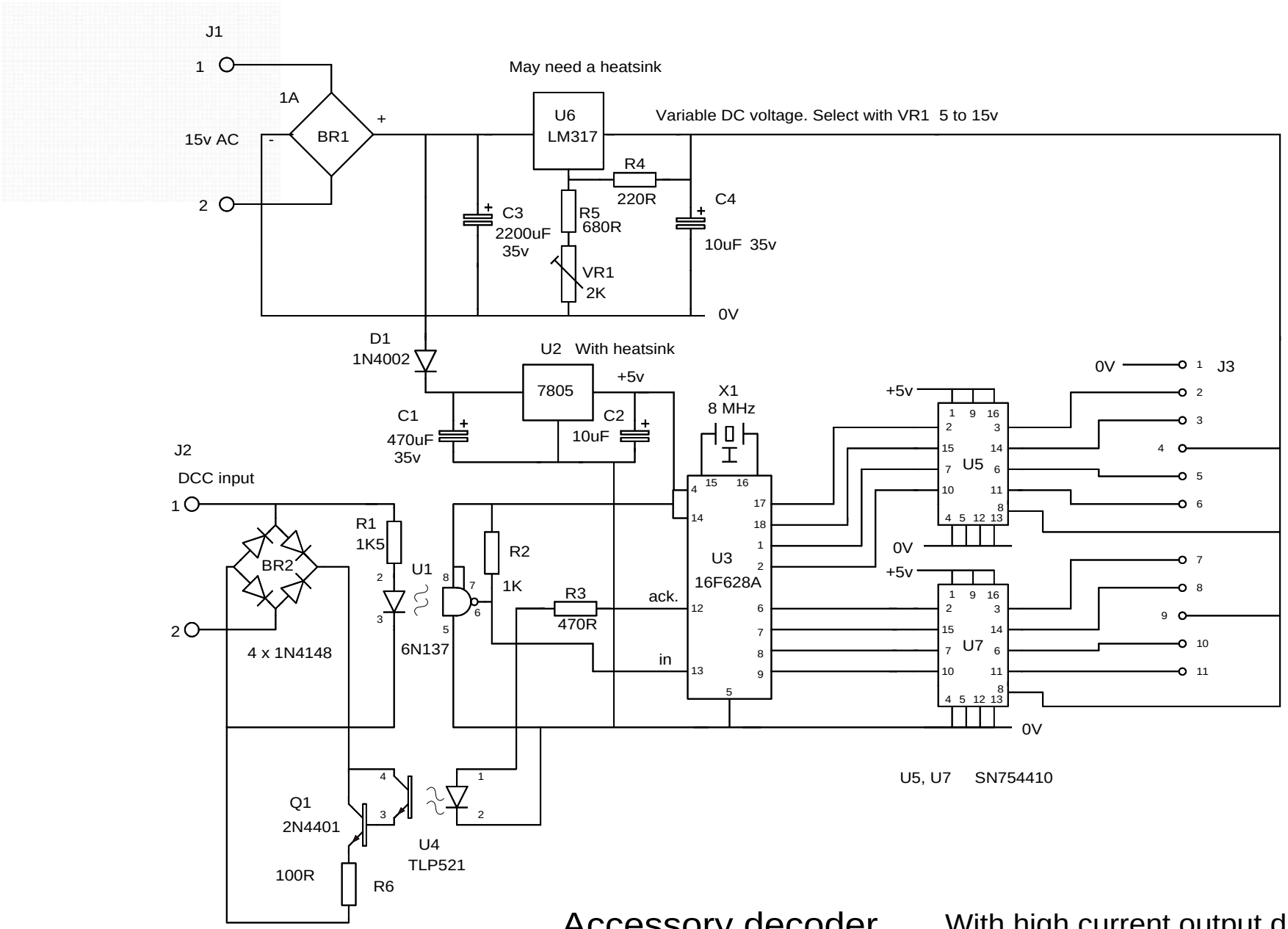

Accessory decoder

With high current output drivers
and adjustable output voltage

ACC6 M P Bolton 03/12/06