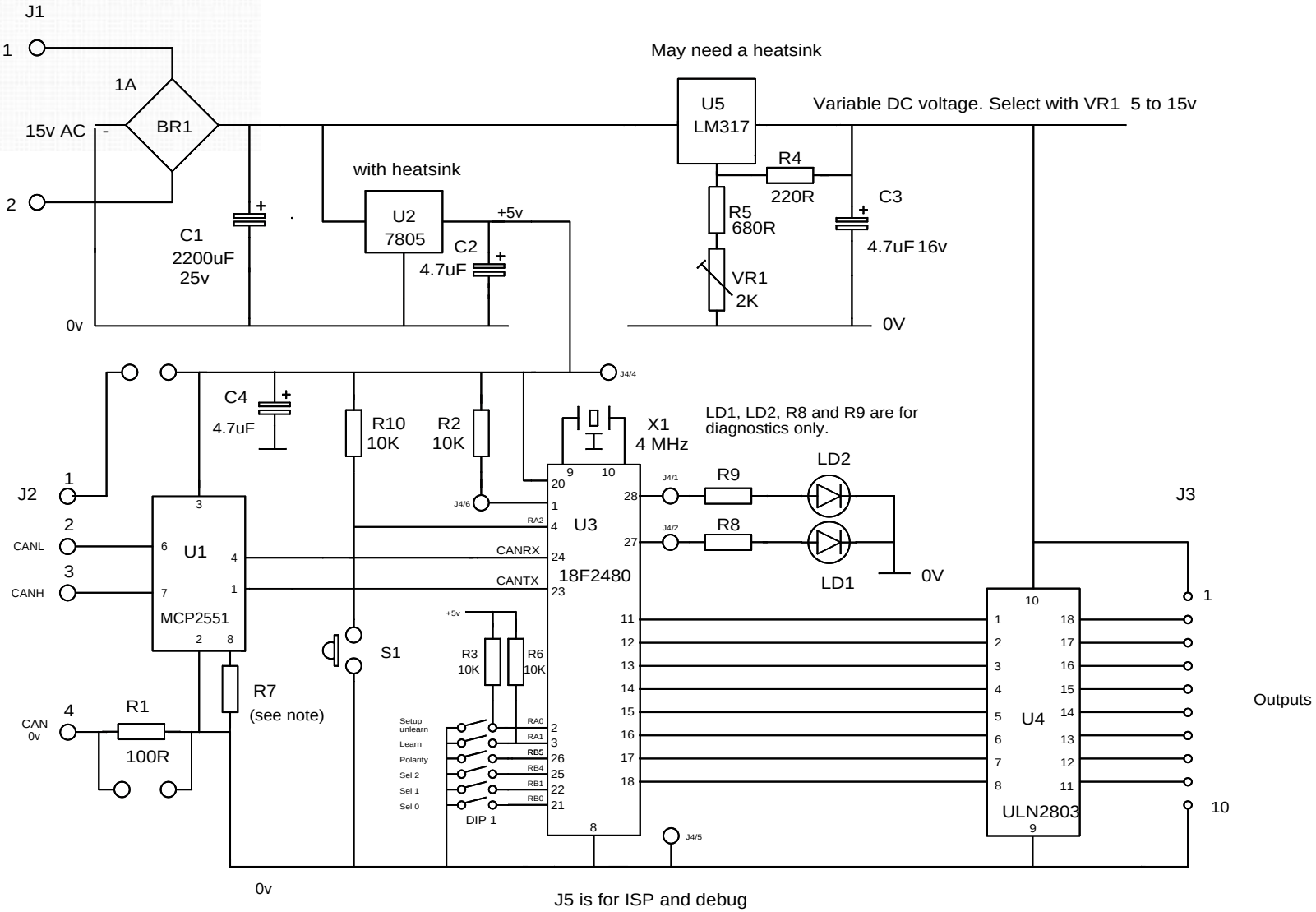

R7 sets the CAN waveform slope.

The value has not yet been decided.

Initially replace R7 with a wire link.

CBUS Steady state Node

Version for 'small layout' model

CANACC8 M P Bolton Rev C 04/02/08

©