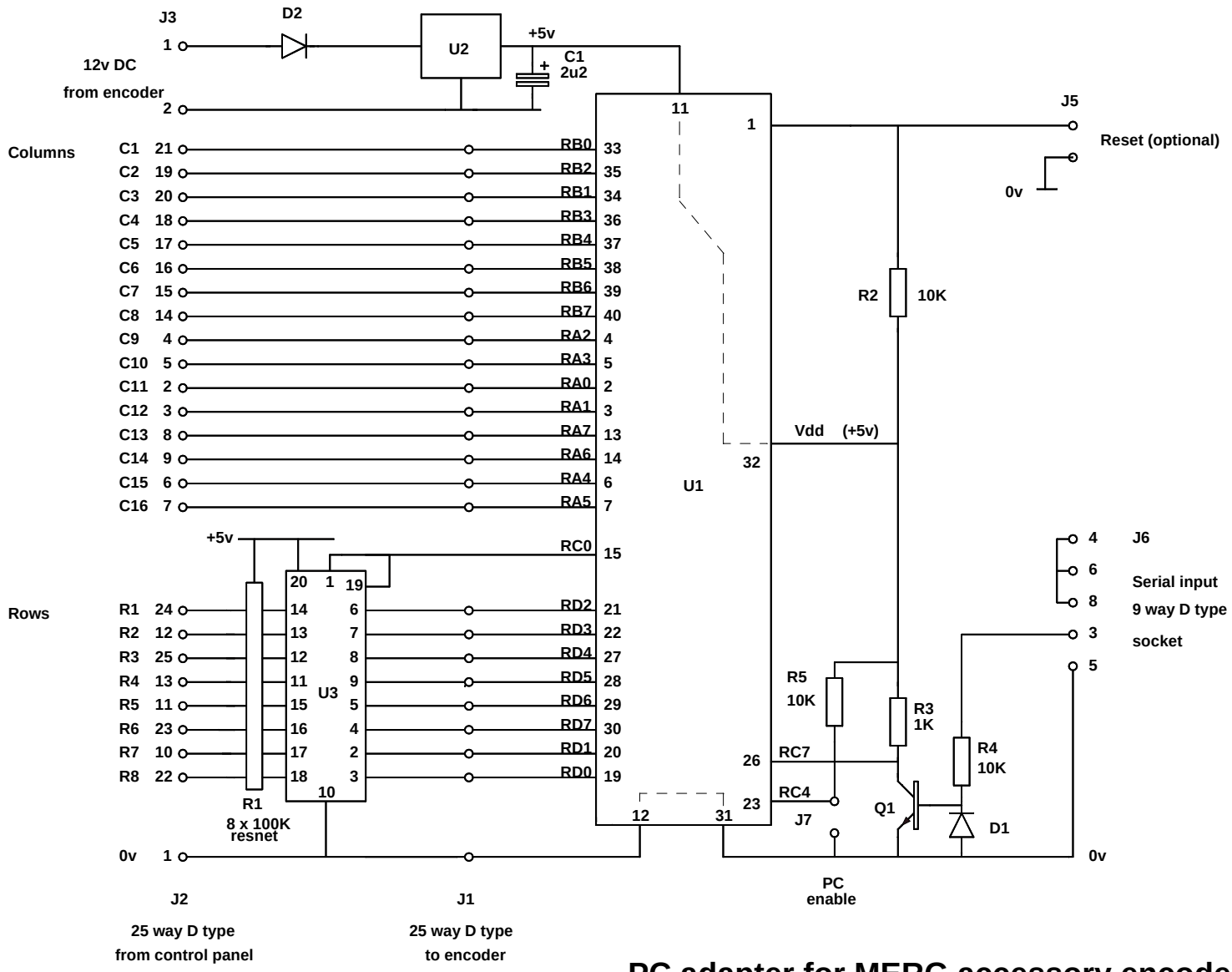

PC adapter for MERG accessory encoder

M Bolton 29/11/04 Rev 2a (10/11/05)

U1	PIC 18F4220	Q1	2N4401 or equiv.
U2	7805 regulator		
U3	74HC245		
D1, D2	1N4148		