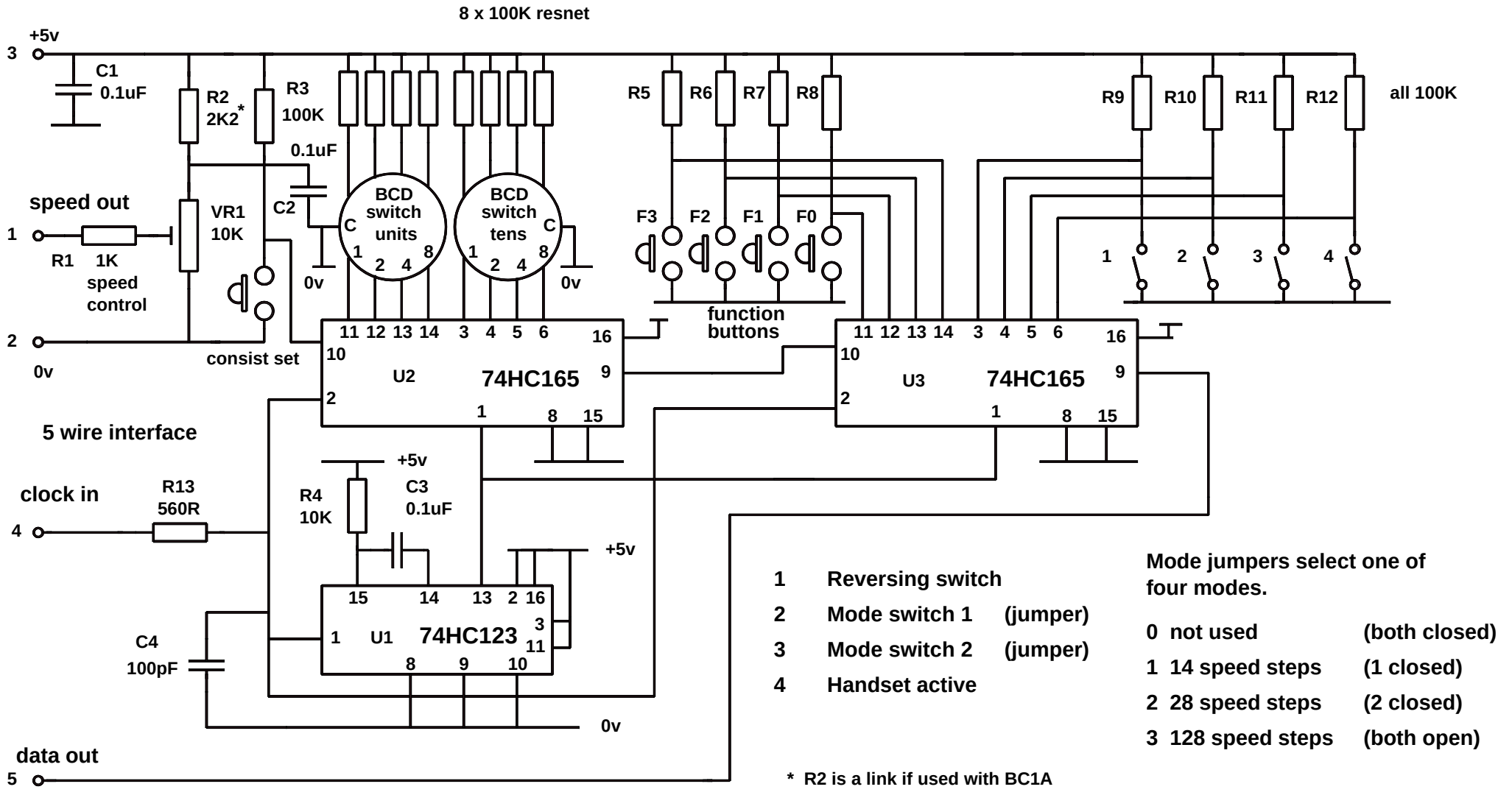

Handset for DCC system. (2 Digit Addressing 4 Modes) M P Bolton (DCCHS2 Rev A)