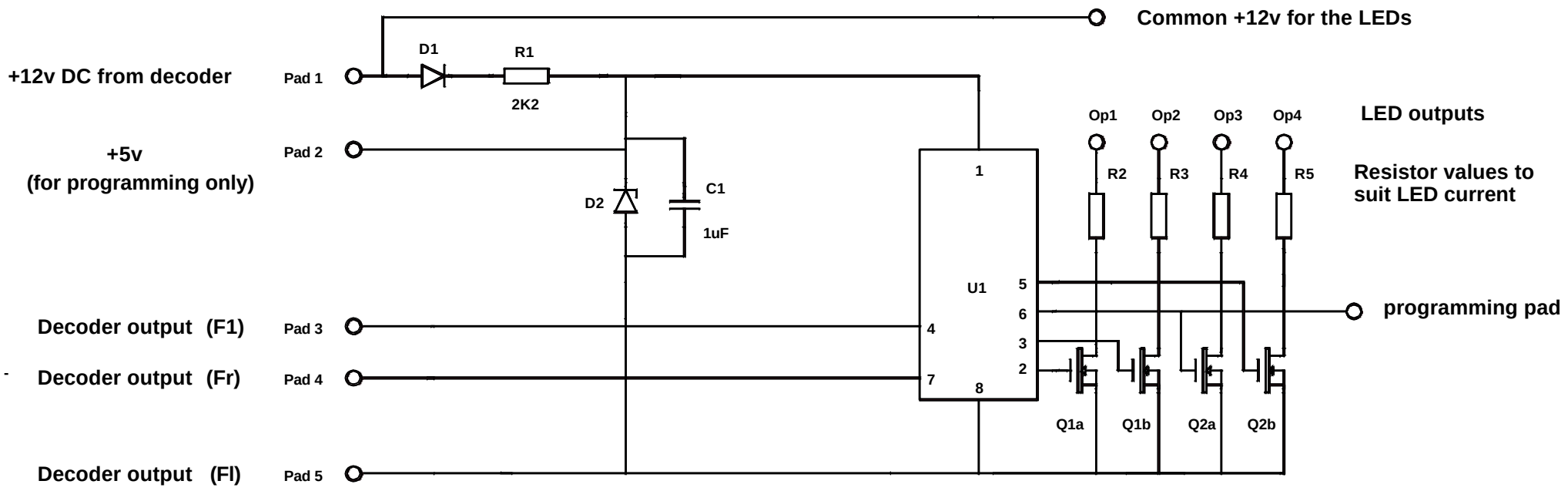

Q1, Q2	FDC 6561AN or NDC 7002N
D1	BAS216 or equivalent
D2	BZX284-C5V1 or BZX399-C5V1
U1	PIC 12C508A/SN or 12C509A/SN

DCC Auxiliary Lighting Unit (FLASH)

M P Bolton 30/06/03

Flash Rev B